Empowering container-based NFVi with VPP on Arm servers

Trevor Tao Trevor.Tao@arm.com
Song Zhu Song.Zhu@arm.com

19/03/2018

© 2018 Arm Limited

Background

- Recent trends: Container-based platforms for OPNFV
- Containerized OpenStack or Kubernetes as VIM
- OPNFV Euphrates release delivers Kubernetes integration
- OPNFV projects: **Container4NFV**, Auto, Clover…
- SFO17 presentation on “Containerized VNFs

© 2018 Arm Limited

Container-based NFV Architecture

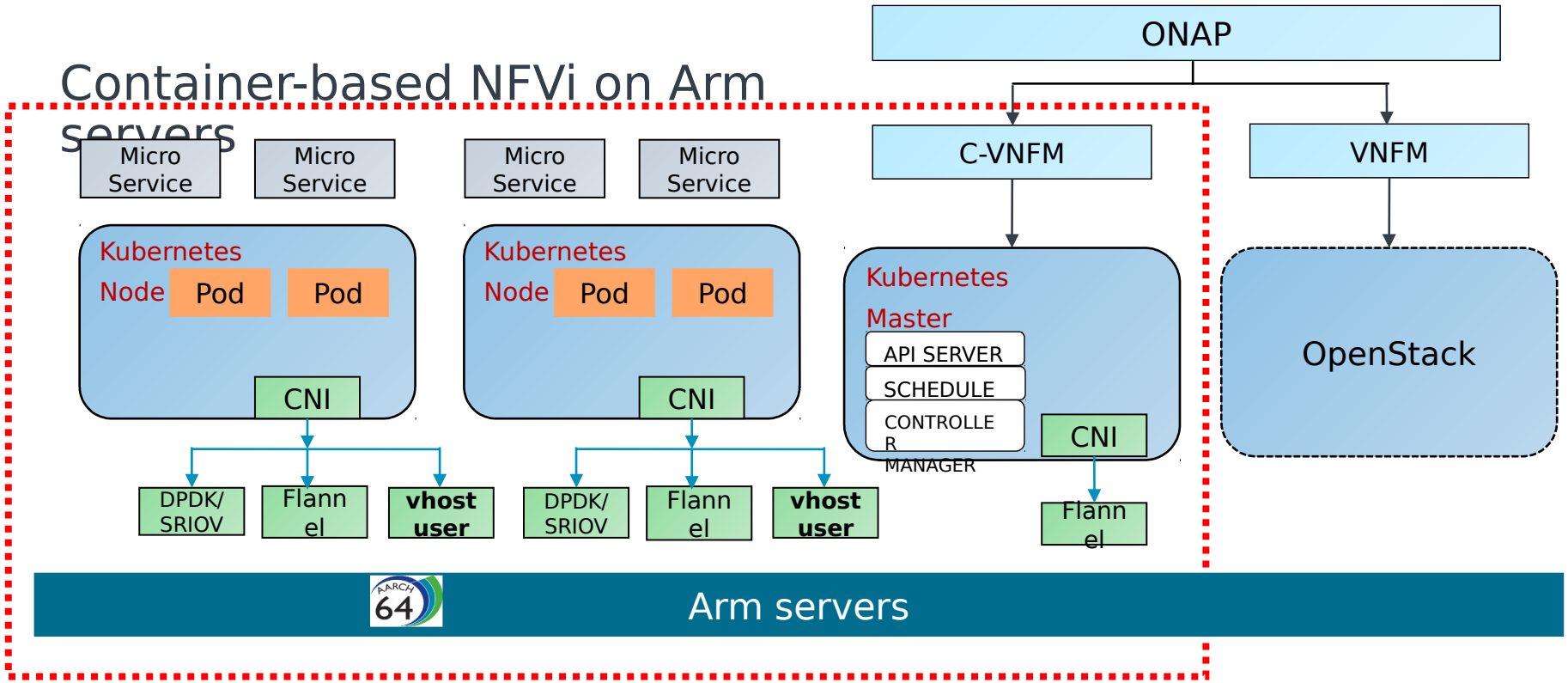

Kubernetes as VIM

Flannel/SRIOV/vhost user CNI plugins integrated

SRIOV CNI: enable VF passthrough

Vhost-user CNI: enable VPP-based container networking

Ref:
Container4NFV Architecture

© 2018 Arm Limited

FD.io/VPP (Vector Packet Processing)

- User Space software platform providing switch/router functionalities
- Aiming to run on commodity CPUs
- Cisco developed it from 2002 and open sourced it in FD.io (Linux Foundation) on Feb 2016
- Leverage DPDK, XDP, netmap… as fast I/O
- Batch packet processing - more efficient iCache utilization
- Packet processing graph: modular, flexible, and extensible
- **Fast**, **scalable** and **deterministic**
  - 14+ Mpps per core, tested to 1TB
  - Scalable FIB: supporting millions of entries

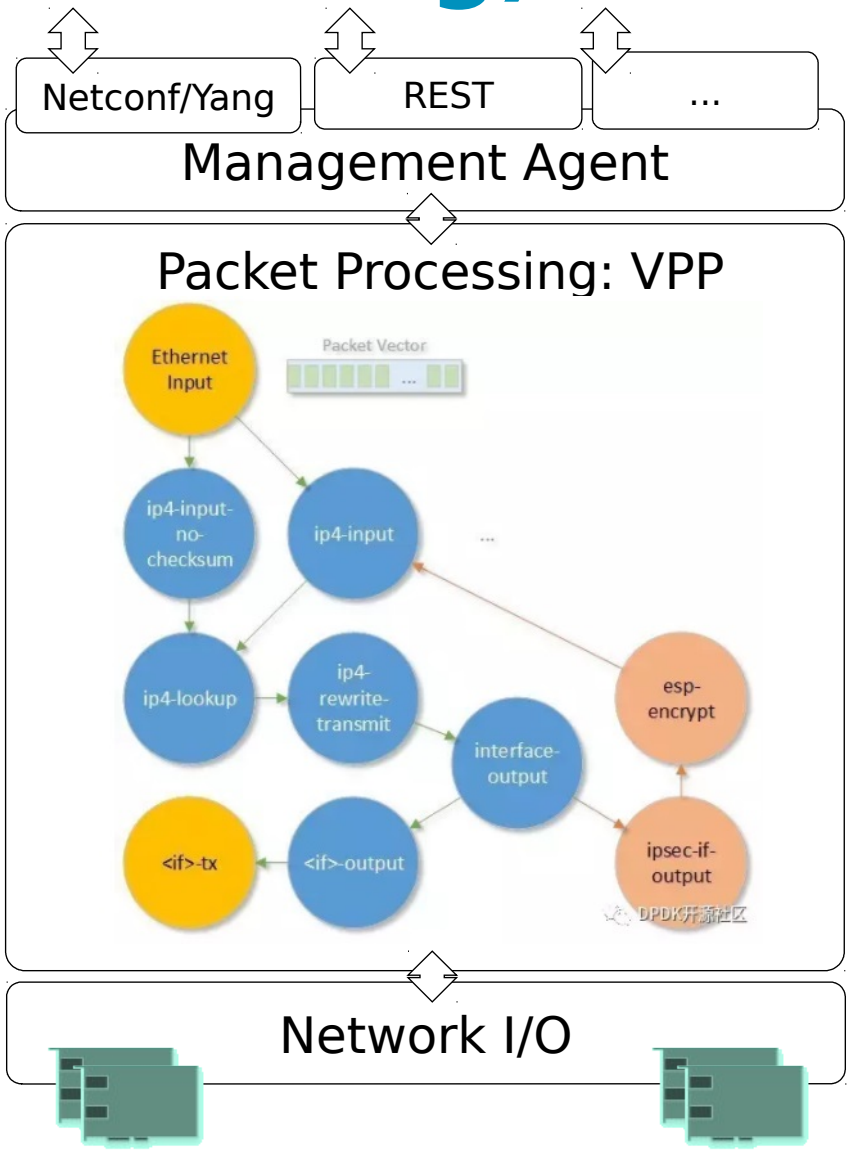

© 2018 Arm Limited

Why VPP

- Container networking requirements for NFV

  High performance on packet processing

  High scalability

  High flexibility

  What VPP provides

  High performance

  Abundant interfaces: ssvm, virtio/vhost, af_packet, tap, memif…

  Abundant features for control and management

© 2018 Arm Limited
arm

VPP for Container Networking with AF_Packet interface

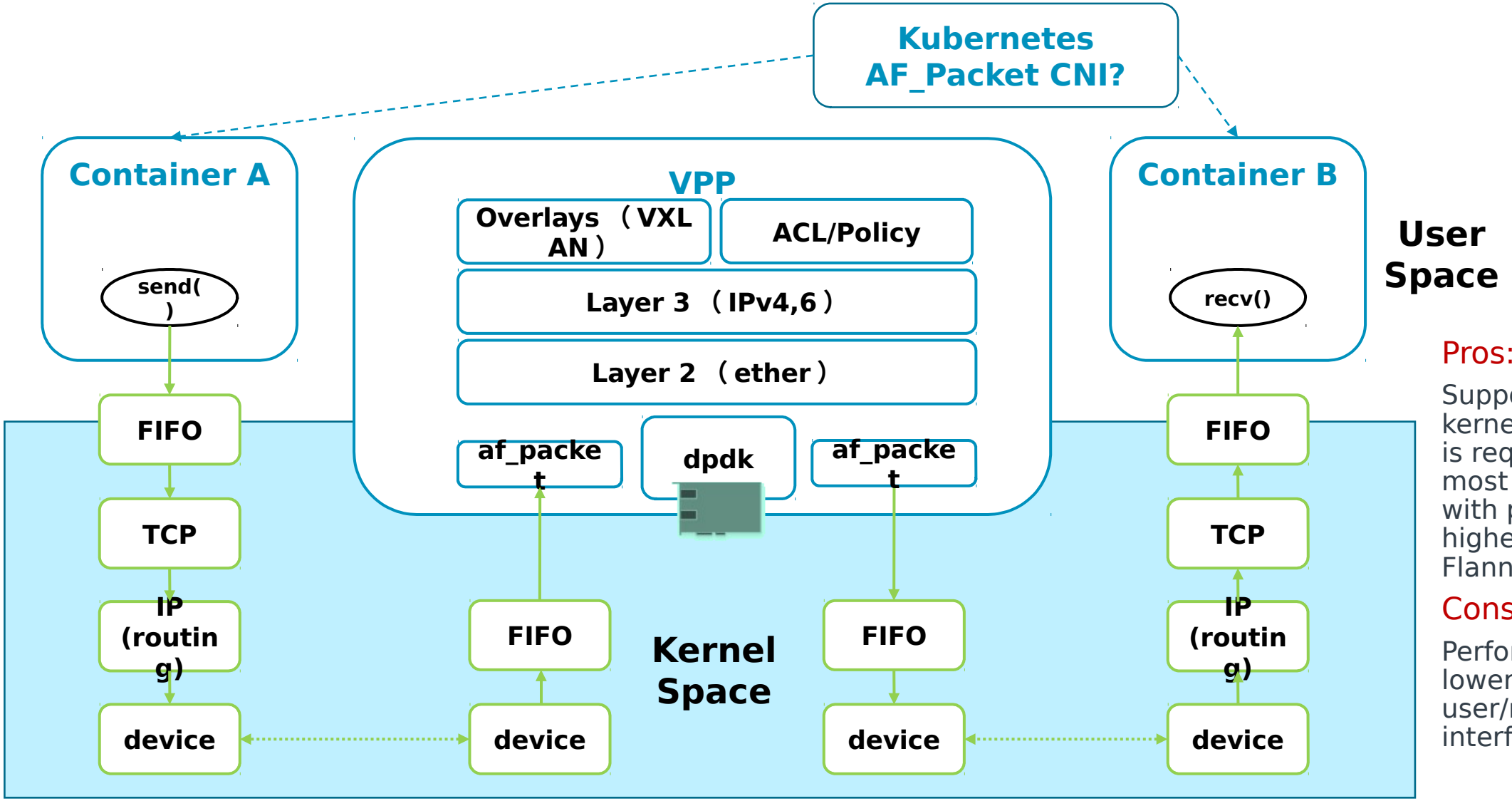

Pros:

Support Linux kernel stack which is required by most applications with performance higher than Flannel

Cons:

Performance is lower than vhost-user/memif interface

© 2018 Arm Limited

VPP for Container Networking with Virtio-Vhost Interface

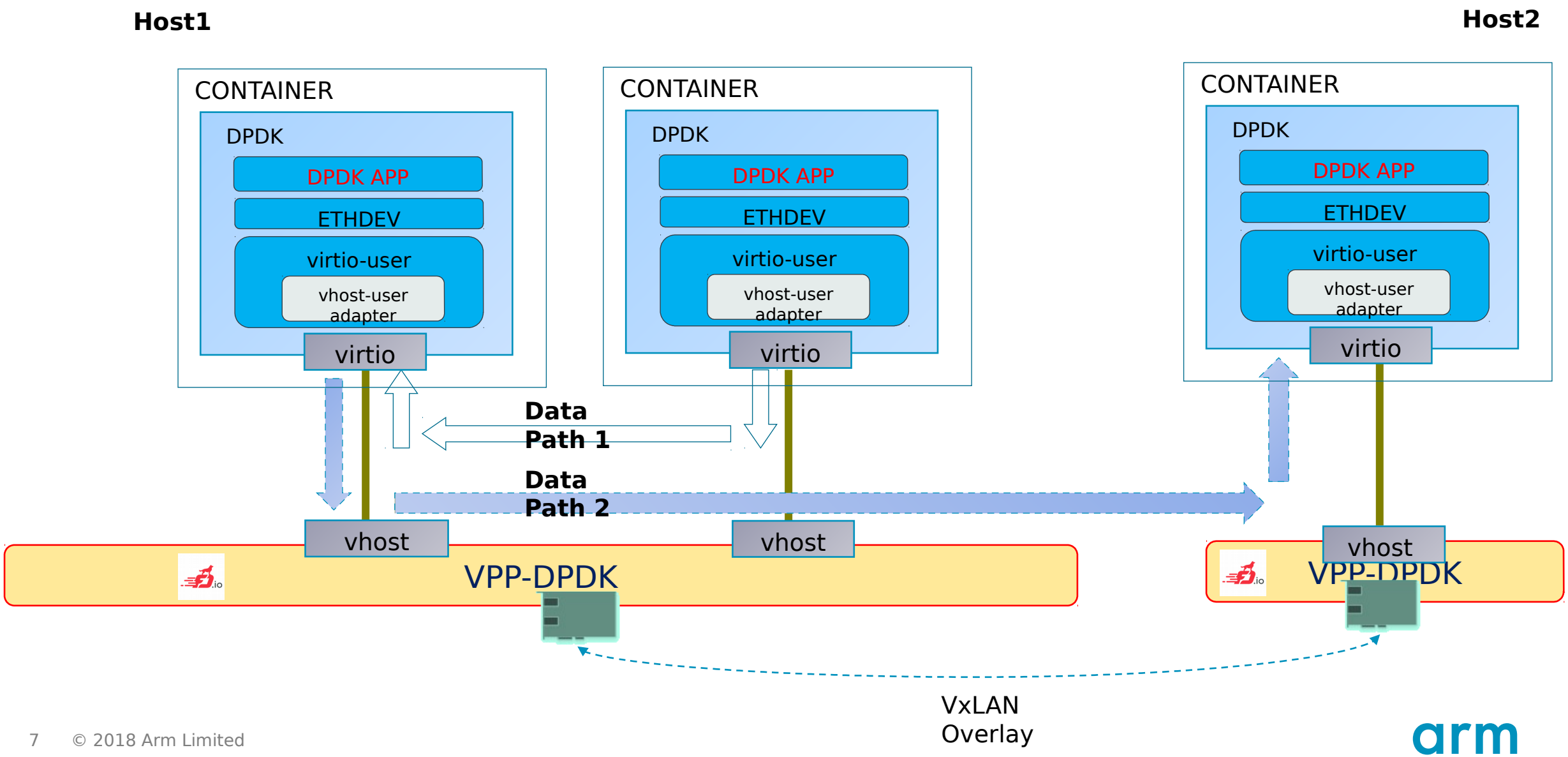

© 2018 Arm Limited

Vhost-user CNI for Kubernetes

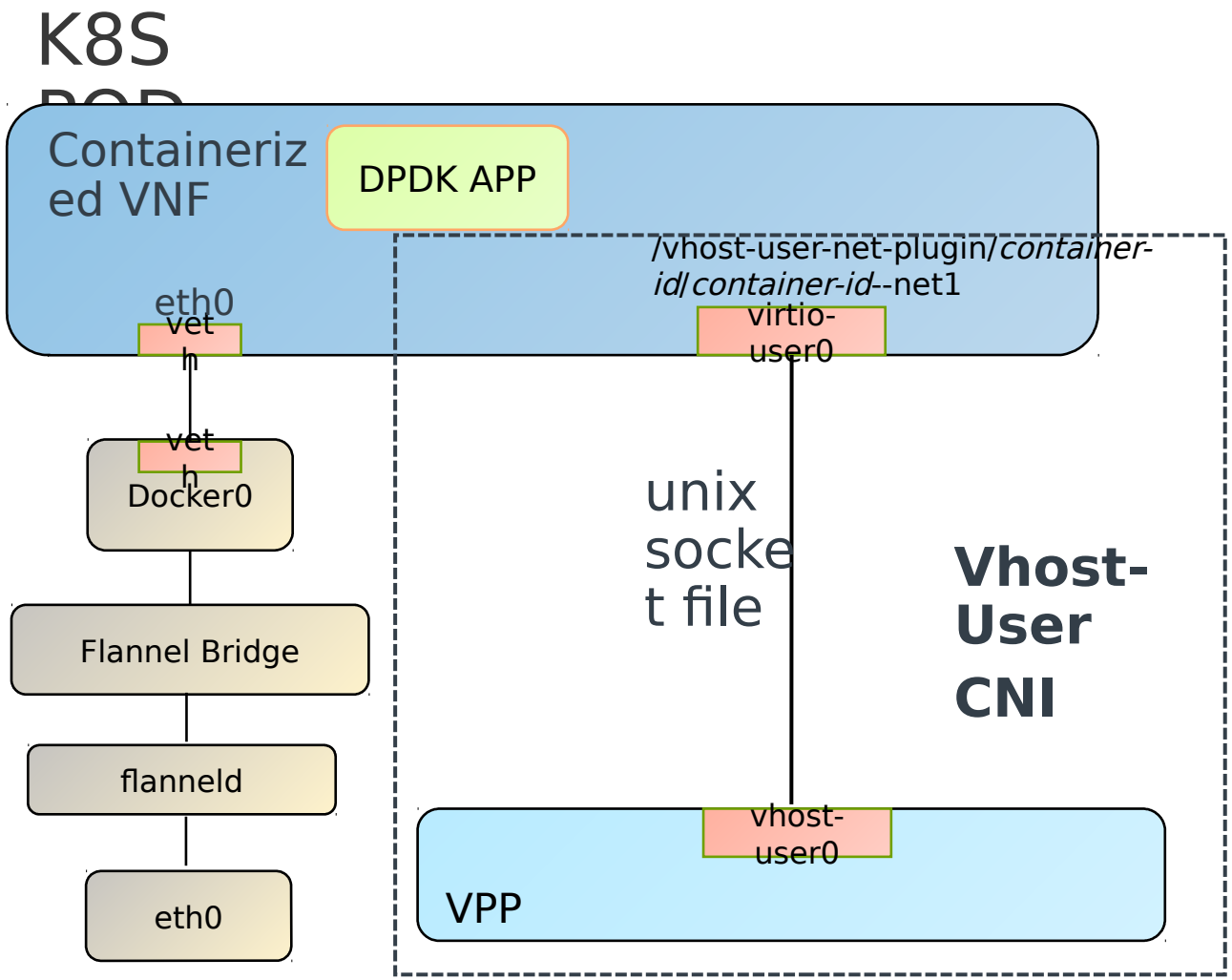

- Vhost-user server socket(interface) is created in VPP
- After adding the vhost user CNI path, the virtio-user interface is used as a virtual device of DPDK

© 2018 Arm Limited

What We Have Done

- Enabled VPP release/17.10 on Arm64 servers
- Integrated VPP with Kubernetes for inter-container communication with virtio/vhost-user interfaces on Arm servers
- Enhanced vhost-user CNI for Kubernetes with VPP
- Enabling VPP-based use cases for OPNFV Container4NFV project

© 2018 Arm Limited

Next Steps (provisional)

- Continue VPP enablement and performance tuning on Arm servers
- Performance benchmarking with VSperf on Arm servers
- VPP integration (CI/CD enablement) in OPNFV Gambia release (Nov 2018)
- Enable and integrate other VPP based CNI solutions (memif, …)
- Enable more VPP-based use cases (microservices and SFC) for NFVi
- Integrate VPP-based NFV solutions with orchestration software (ONAP)

 © 2018 Arm Limited

Nginx as CDN Use Case (prototional)

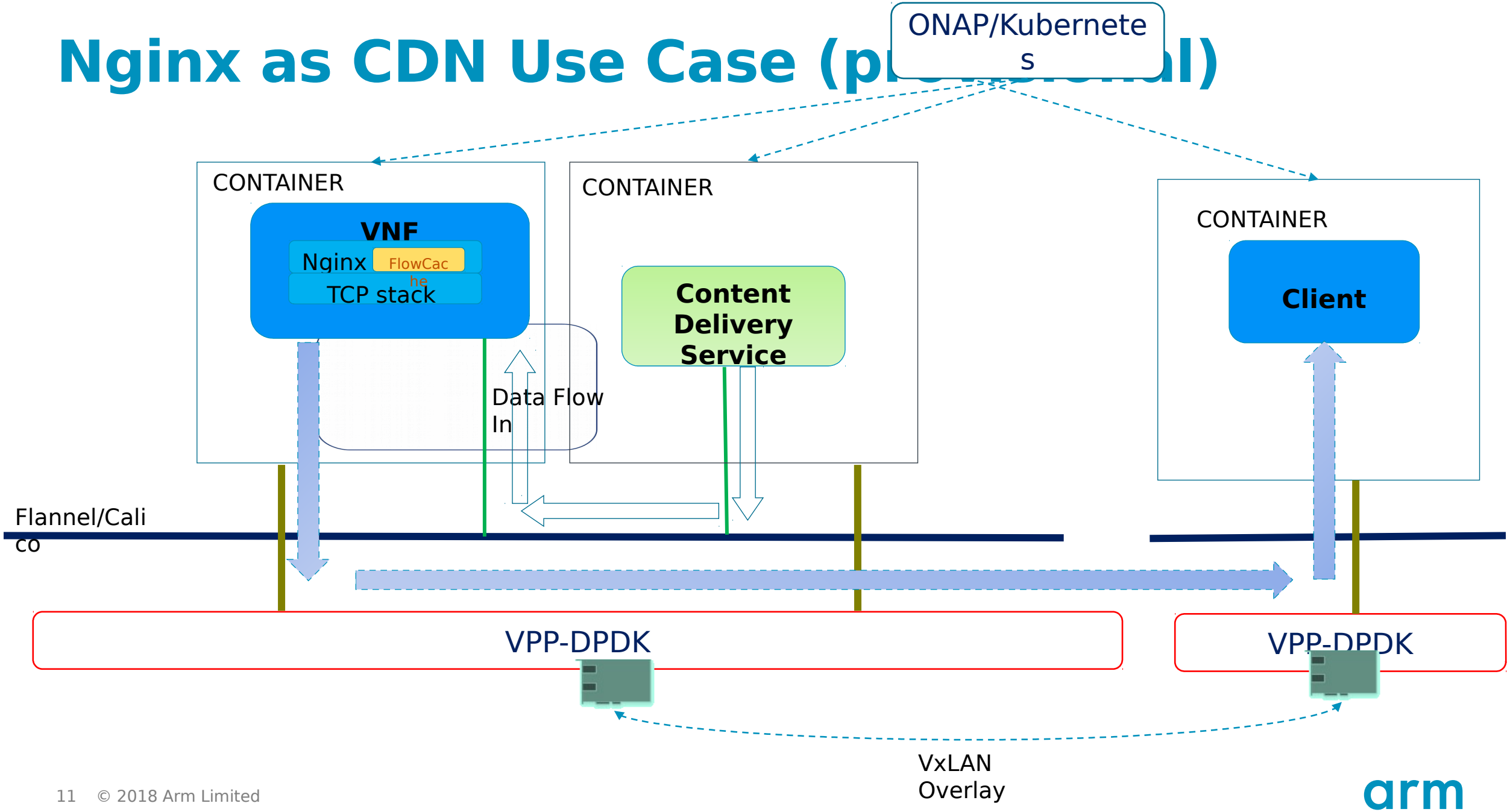

 © 2018 Arm Limited

Thank You
Danke
Merci
谢谢
ありがとう
Gracias
Kiitos
감사합니다
धन्यवाद
תודה

arm

 © 2018 Arm Limited